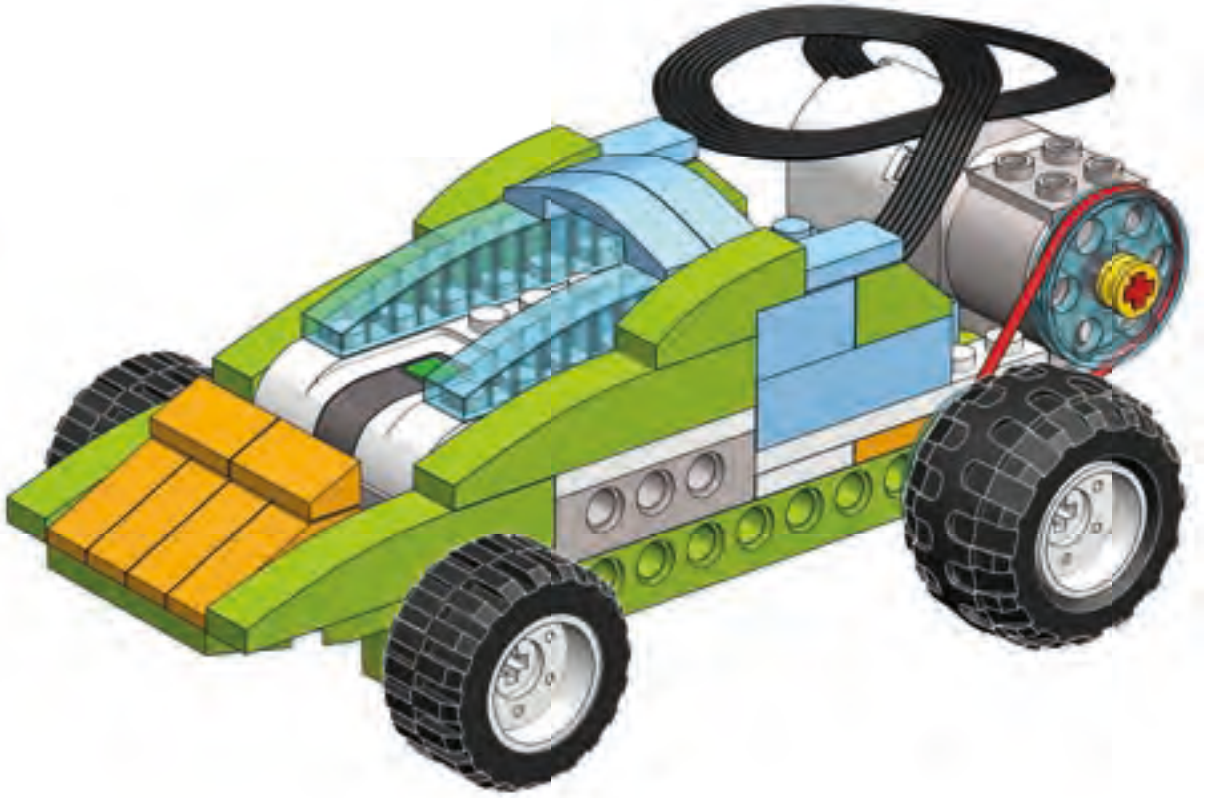

x 1
x 1
x 2

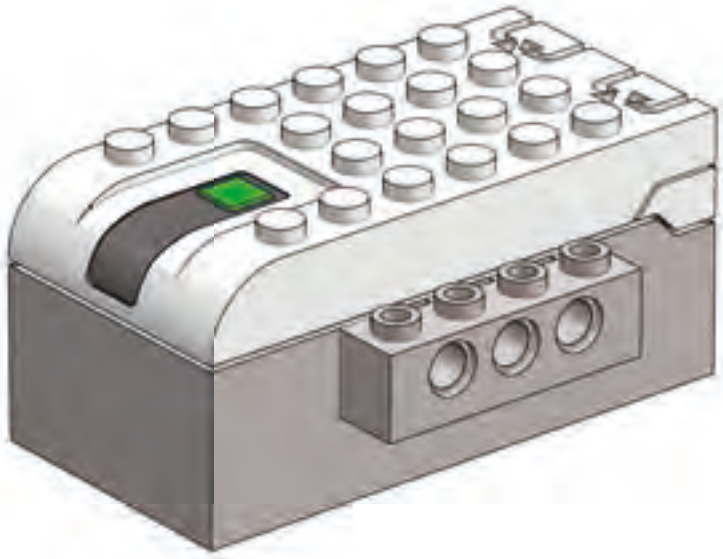

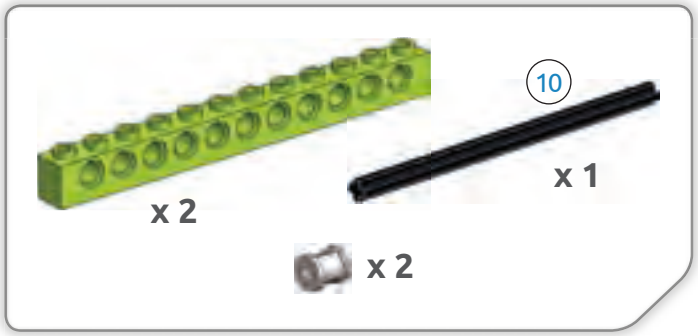
10
x 1
x 2
x 2

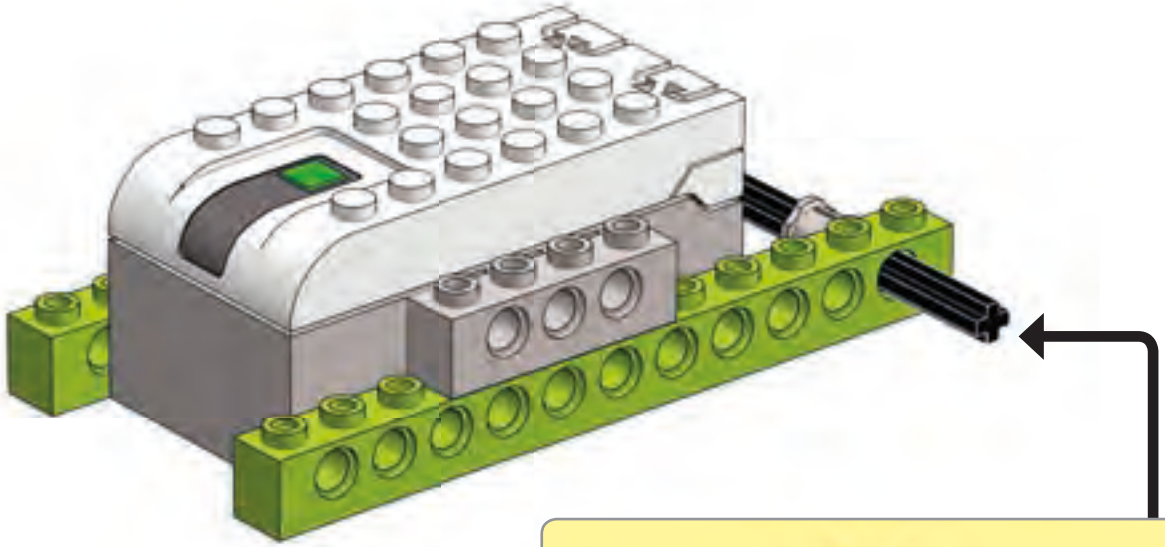

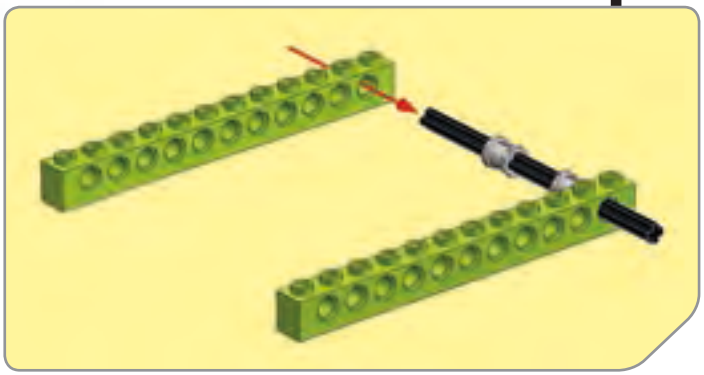

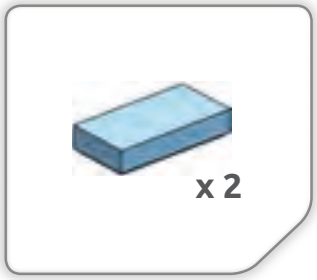
x 2

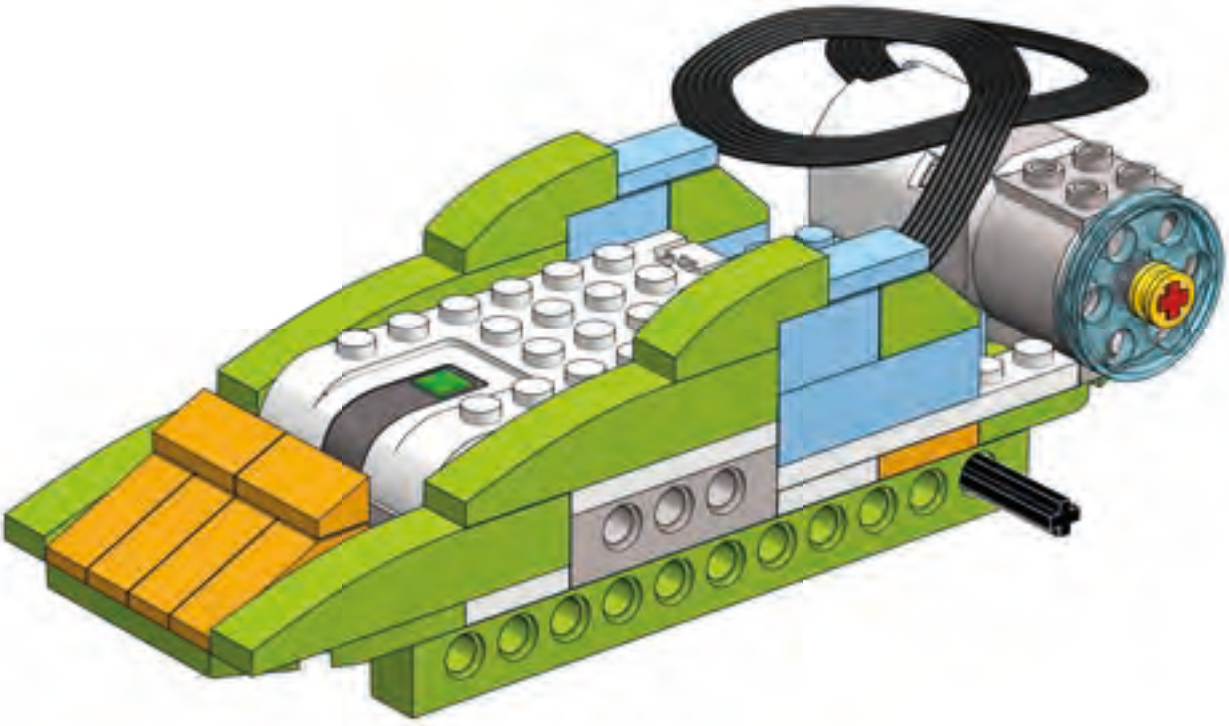

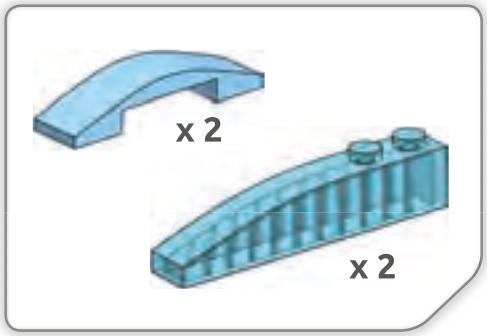
x 2
x 2

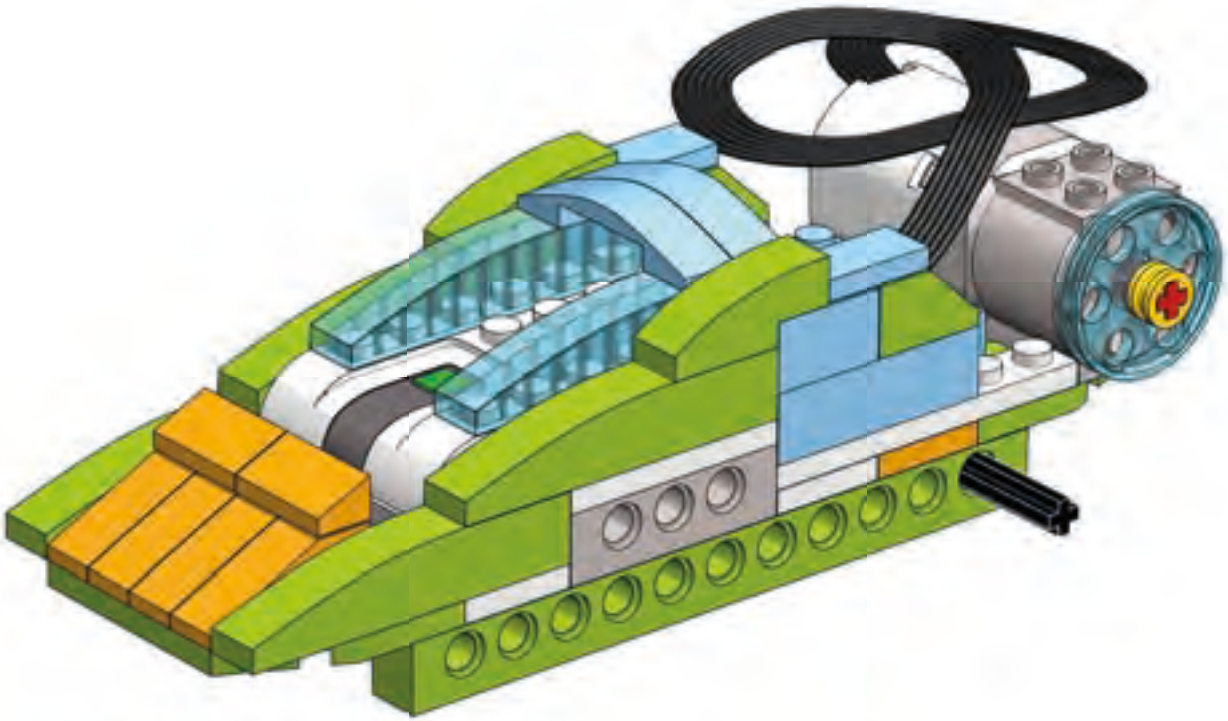
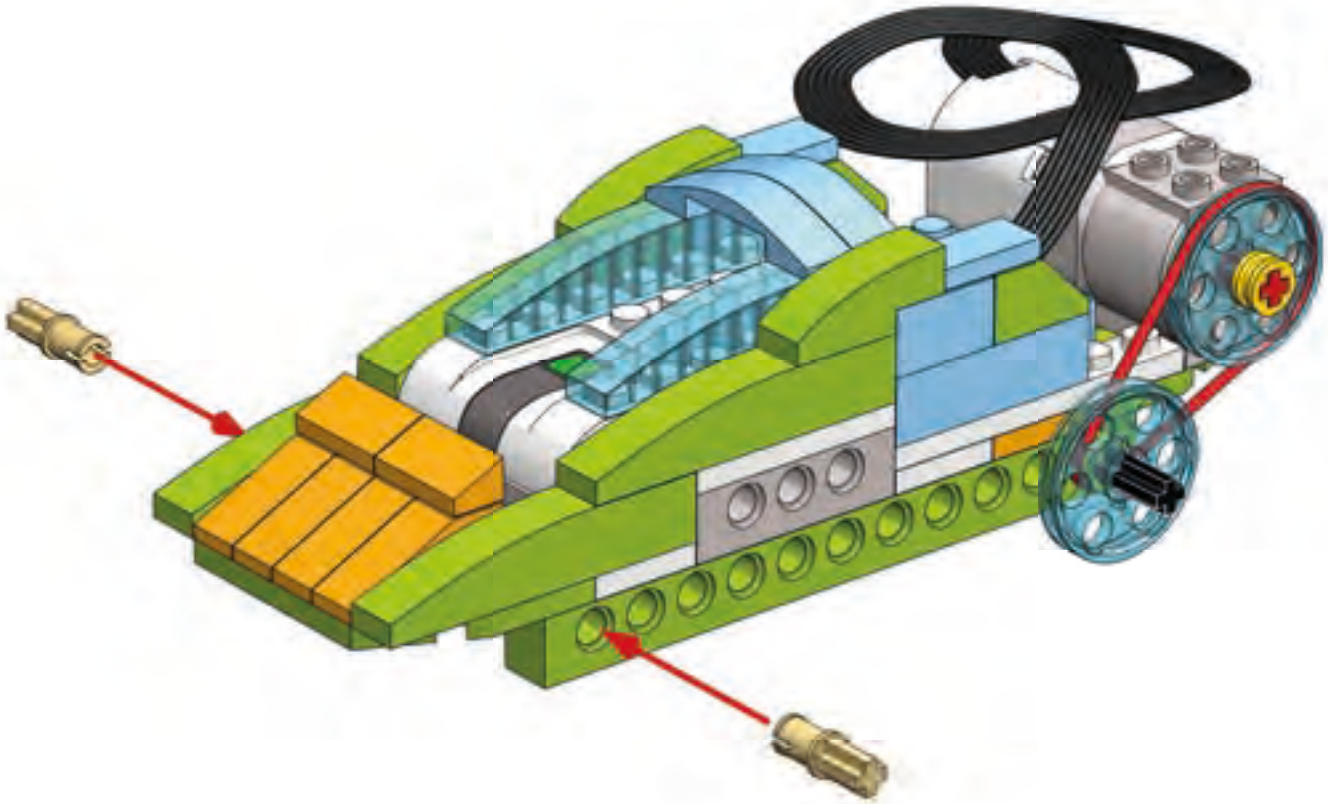
x 2